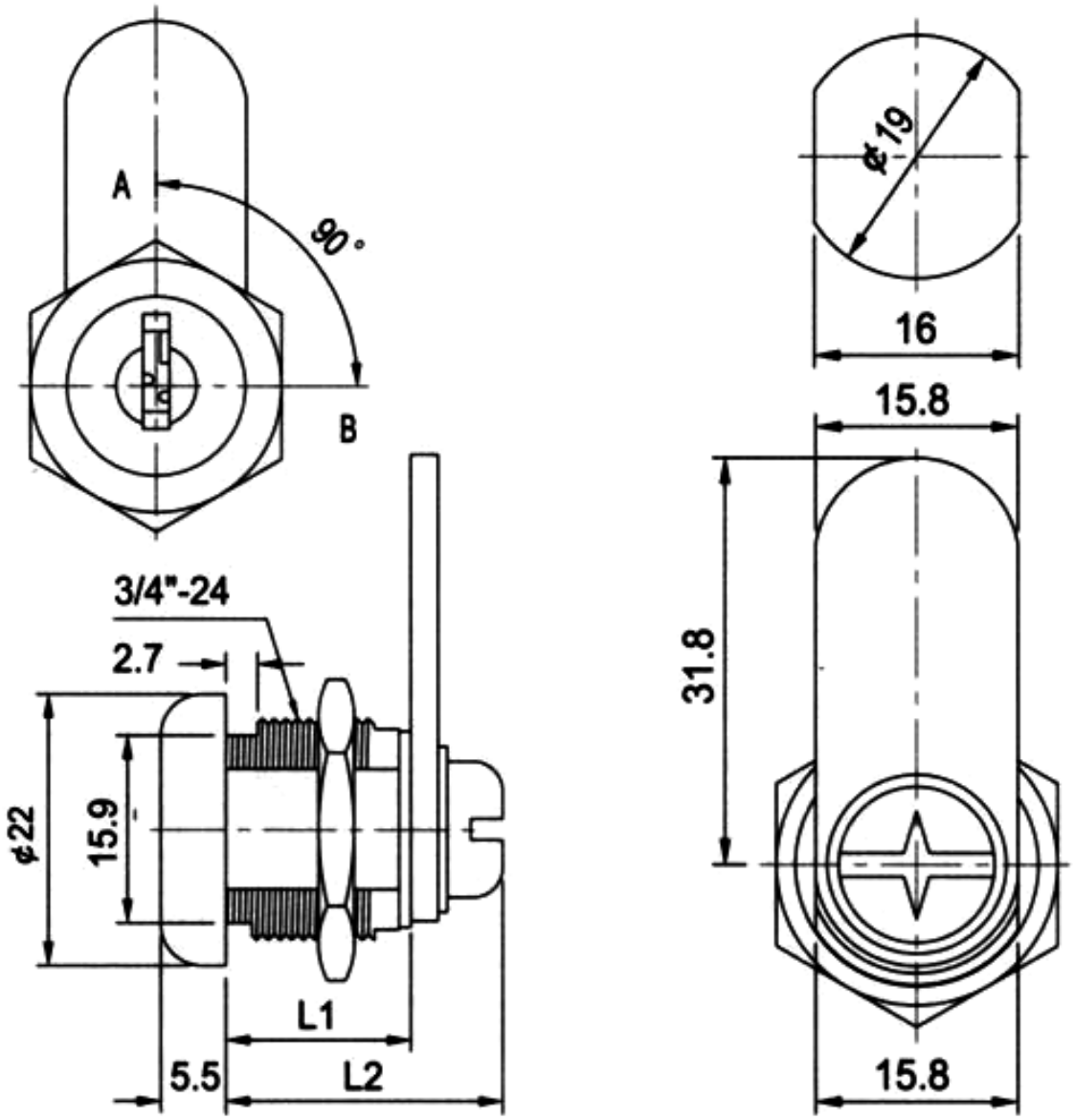
A
90°
B
3/4"-24
2.7
¢22
15.9
L1
5.5
L2
¢19
16
15.8
31.8
15.8